С-ЕХ Изхвъргач стъпален азотиран - размери в инча /
Ejector pin shoulder nitrided - inches

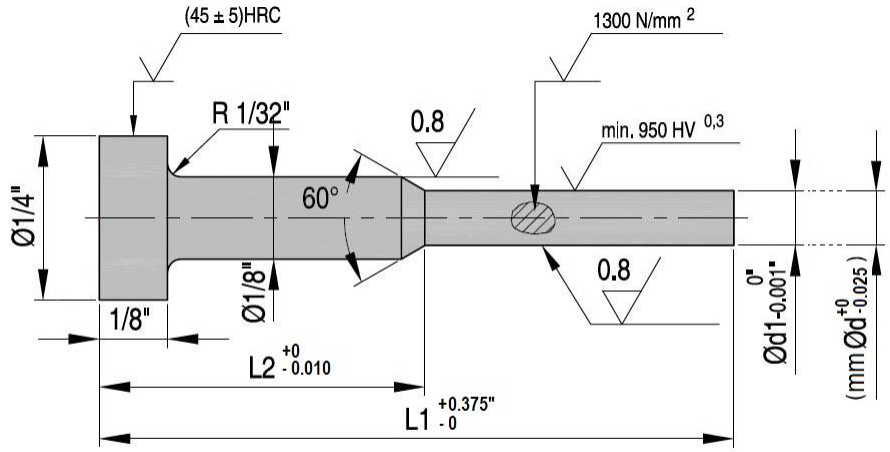

Материал: H13, азотиран.
Макс. работна температура 500-550 °C

Material: H13 nitrided
Max. Temp.: 500-550 °C

Код/Code	d1	d	L1	L2
EX/2x1/2“/06“	1/32“	0.794	6“(152.4mm)	1/2“(12.7mm)
EX/2x2“/06“	1/32“	0.794	6“(152.4mm)	2“(50.8mm)
EX/3x1/2“/06“	3/64“	1.191	6“(152.4mm)	1/2“(12.7mm)
EX/3x1/2“/10“	3/64“	1.191	10“(254mm)	1/2“(12.7mm)
EX/3x1/2“/14“	3/64“	1.191	14“(355.6mm)	1/2“(12.7mm)
EX/3x2“/06“	3/64“	1.191	6“(152.4mm)	2“(50.8mm)
EX/3x2“/10“	3/64“	1.191	10“(254mm)	2“(50.8mm)
EX/3x2“/14“	3/64“	1.191	14“(355.6mm)	2“(50.8mm)
EX/5x1/2“/06“	1/16“	1.587	6“(152.4mm)	1/2“(12.7mm)
EX/5x1/2“/10“	1/16“	1.587	10“(254mm)	1/2“(12.7mm)
EX/5x1/2“/14“	1/16“	1.587	14“(355.6mm)	1/2“(12.7mm)
EX/5x2“/06“	1/16“	1.587	6“(152.4mm)	2“(50.8mm)
EX/5x2“/10“	1/16“	1.587	10“(254mm)	2“(50.8mm)
EX/5x2“/14“	1/16“	1.587	14“(355.6mm)	2“(50.8mm)
EX/6x1/2“/06“	5/64“	1.984	6“(152.4mm)	1/2“(12.7mm)
EX/6x1/2“/10“	5/64“	1.984	10“(254mm)	1/2“(12.7mm)
EX/6x1/2“/14“	5/64“	1.984	14“(355.6mm)	1/2“(12.7mm)
EX/6x2“/06“	5/64“	1.984	6“(152.4mm)	2“(50.8mm)
EX/6x2“/10“	5/64“	1.984	10“(254mm)	2“(50.8mm)
EX/6x2“/14“	5/64“	1.984	14“(355.6mm)	2“(50.8mm)
EX/7x1/2“/06“	3/32“	2.381	6“(152.4mm)	1/2“(12.7mm)
EX/7x1/2“/10“	3/32“	2.381	10“(254mm)	1/2“(12.7mm)
EX/7x1/2“/14“	3/32“	2.381	14“(355.6mm)	1/2“(12.7mm)
EX/7x2“/06“	3/32“	2.381	6“(152.4mm)	2“(50.8mm)
EX/7x2“/10“	3/32“	2.381	10“(254mm)	2“(50.8mm)
EX/7x2“/14“	3/32“	2.381	14“(355.6mm)	2“(50.8mm)
EX/8x1/2“/06“	7/64“	2.778	6“(152.4mm)	1/2“(12.7mm)
EX/8x1/2“/10“	7/64“	2.778	10“(254mm)	1/2“(12.7mm)
EX/8x1/2“/14“	7/64“	2.778	14“(355.6mm)	1/2“(12.7mm)
EX/8x2“/06“	7/64“	2.778	6“(152.4mm)	2“(50.8mm)
EX/8x2“/10“	7/64“	2.778	10“(254mm)	2“(50.8mm)
EX/8x2“/14“	7/64“	2.778	14“(355.6mm)	2“(50.8mm)
EX/2x1/2“/06“ OS	1/32“	0.794	6“OS	1/2“(12.7mm)

C-EX Изхвъргач стъпален азотиран - размери в инча /
Ejector pin shoulder nitrided - inches

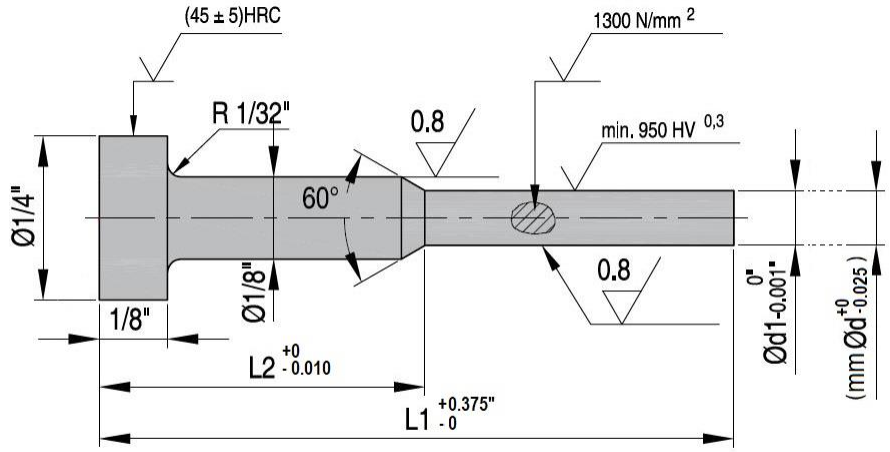

Материал: H13, азотиран.
Макс. работна температура 500-550 °C

Material: H13 nitrided
Max. Temp.: 500-550 °C

Код/Code	d1	d	L1	L2
EX/2x2"/06" OS	1/32"	0.794	6"OS	2"
EX/3x1/2"/10" OS	3/64"	1.191	10"(254mm)OS	1/2"(12.7mm)
EX/3x2"/10" OS	3/64"	1.191	10"(254mm)OS	2"
EX/5x1/2"/10" OS	1/16"	1.587	10"(254mm)OS	1/2"(12.7mm)
EX/5x2"/10" OS	1/16"	1.587	10"(254mm)OS	2"
EX/6x1/2"/10" OS	5/64"	1.984	10"(254mm)OS	1/2"(12.7mm)
EX/6x2"/10" OS	5/64"	1.984	10"(254mm)OS	2"
EX/7x1/2"/10" OS	3/32"	2.381	10"(254mm)OS	1/2"(12.7mm)
EX/7x2"/10" OS	3/32"	2.381	10"(254mm)OS	2"
EX/8x1/2"/10" OS	7/64"	2.778	10"(254mm)OS	1/2"(12.7mm)
EX/8x2"/10" OS	7/64"	2.778	10"(254mm)OS	2"