90 BSP Нипел коляно / Elbows

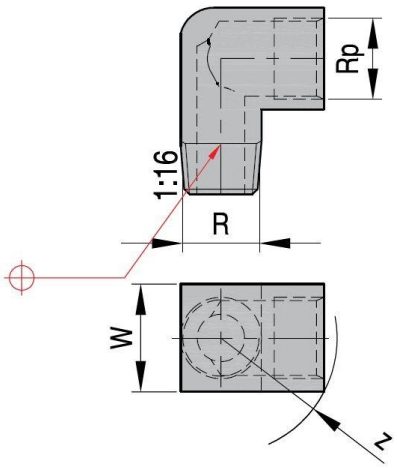

Материал: Месинг *Mat: Brass*

Код/Code	R	Rp	W	Z
20090BSP	1/8"BSPT	1/8"BSP	13	13
30090BSP	1/4"BSPT	1/4"BSP	18	18
50090BSP	1/2"BSPT	1/4"BSP	26	27